Carrodrain **Liquid 700 LOW**

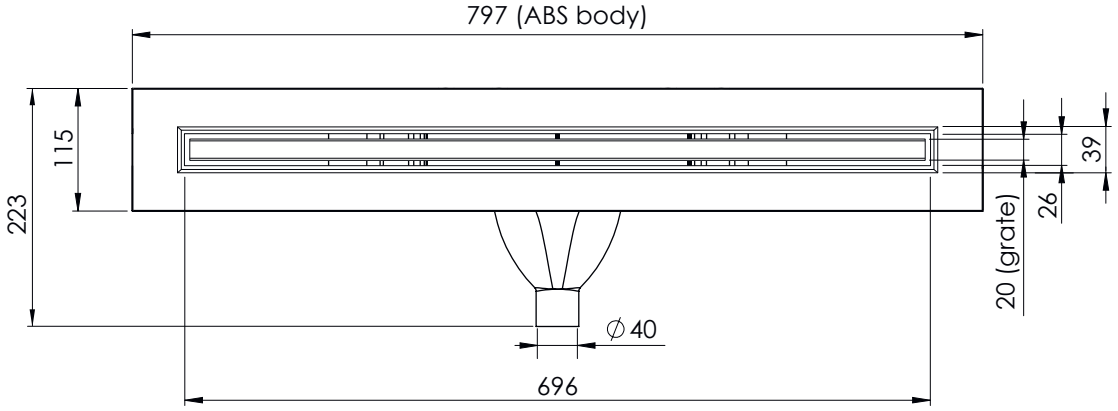

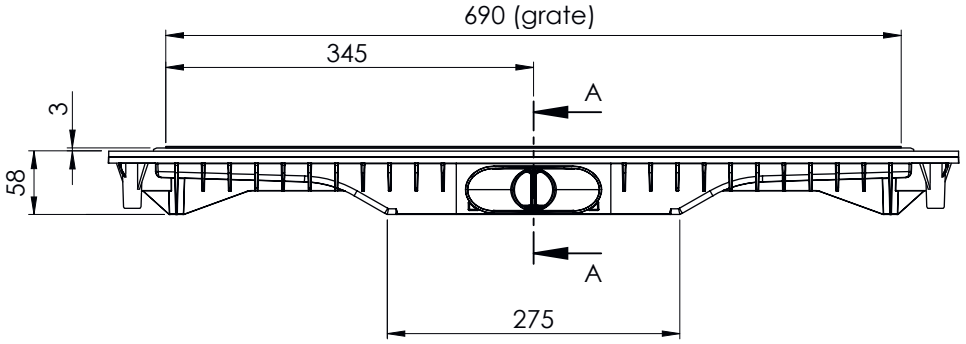

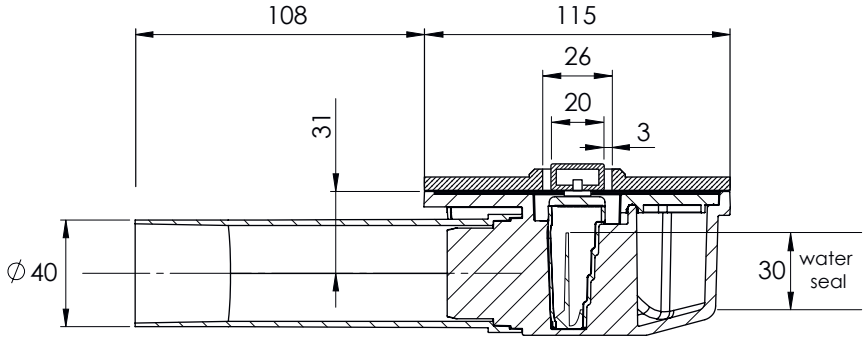

SECTION A-A