Carrodrain **Invisible 800 PRO**

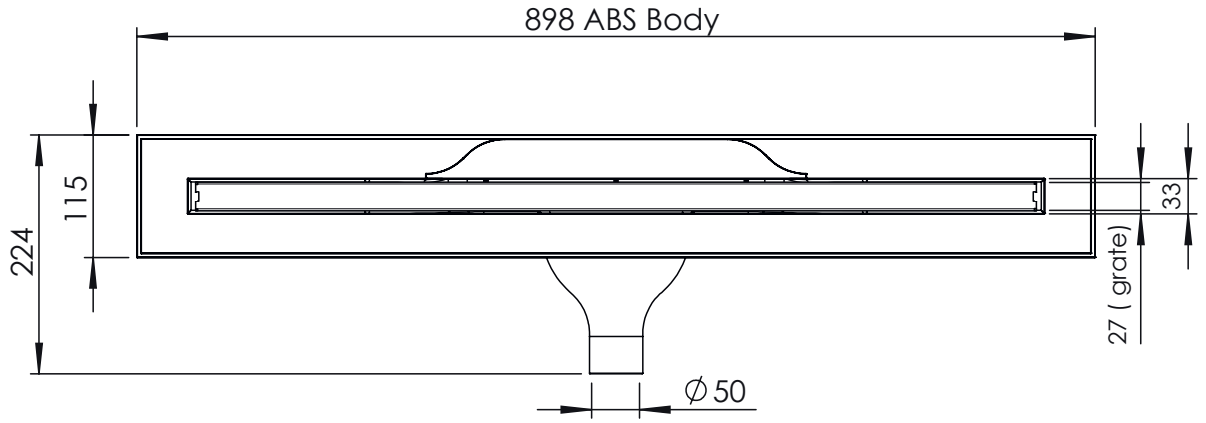

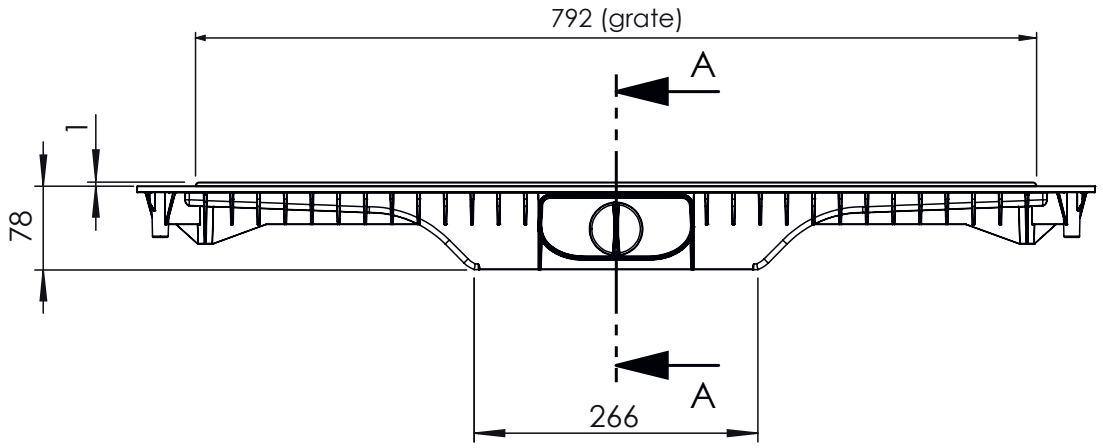

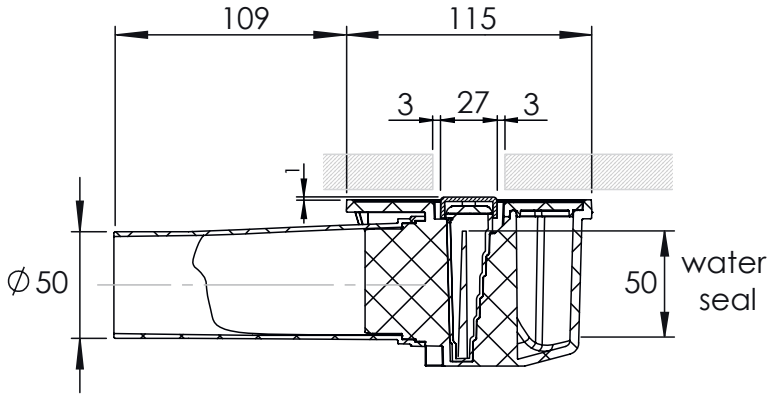

SECTION A-A