Carrodrain **Invisible 600 LOW**

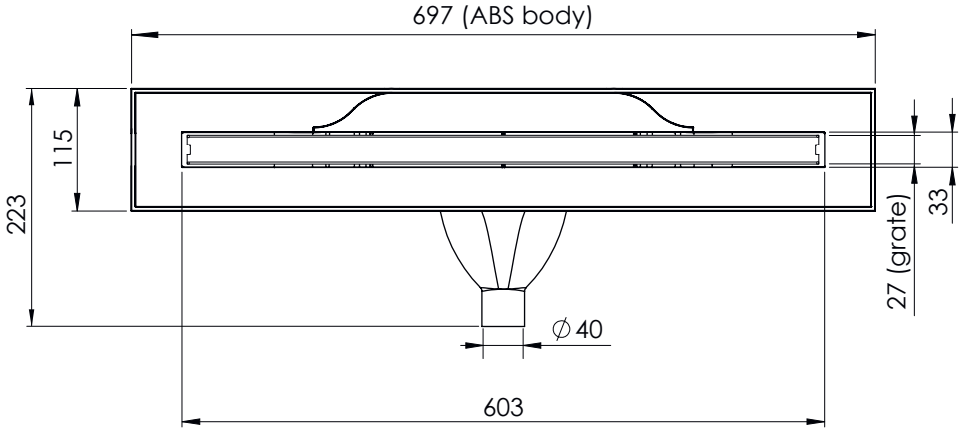

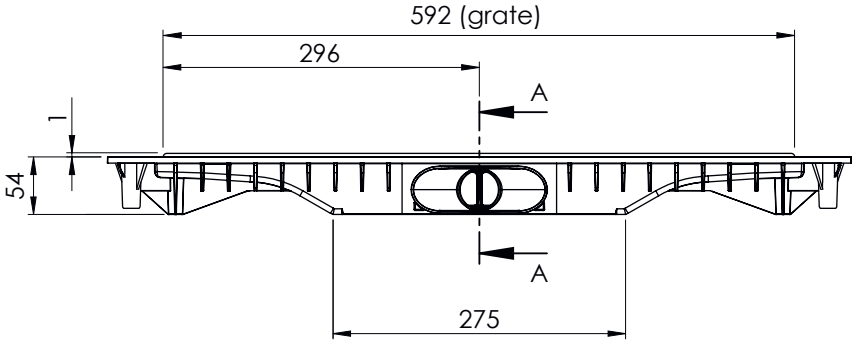

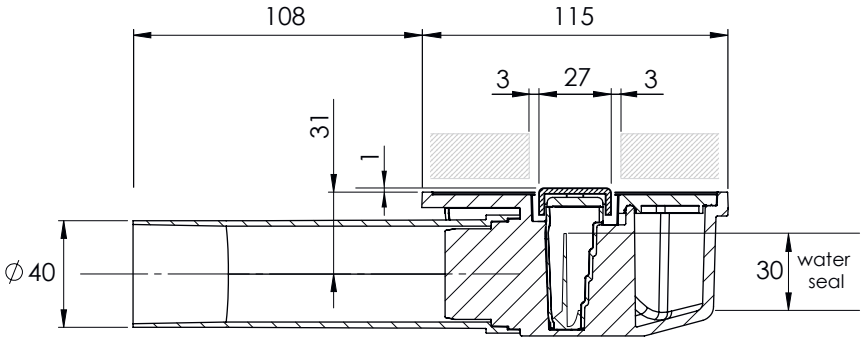

SECTION A-A